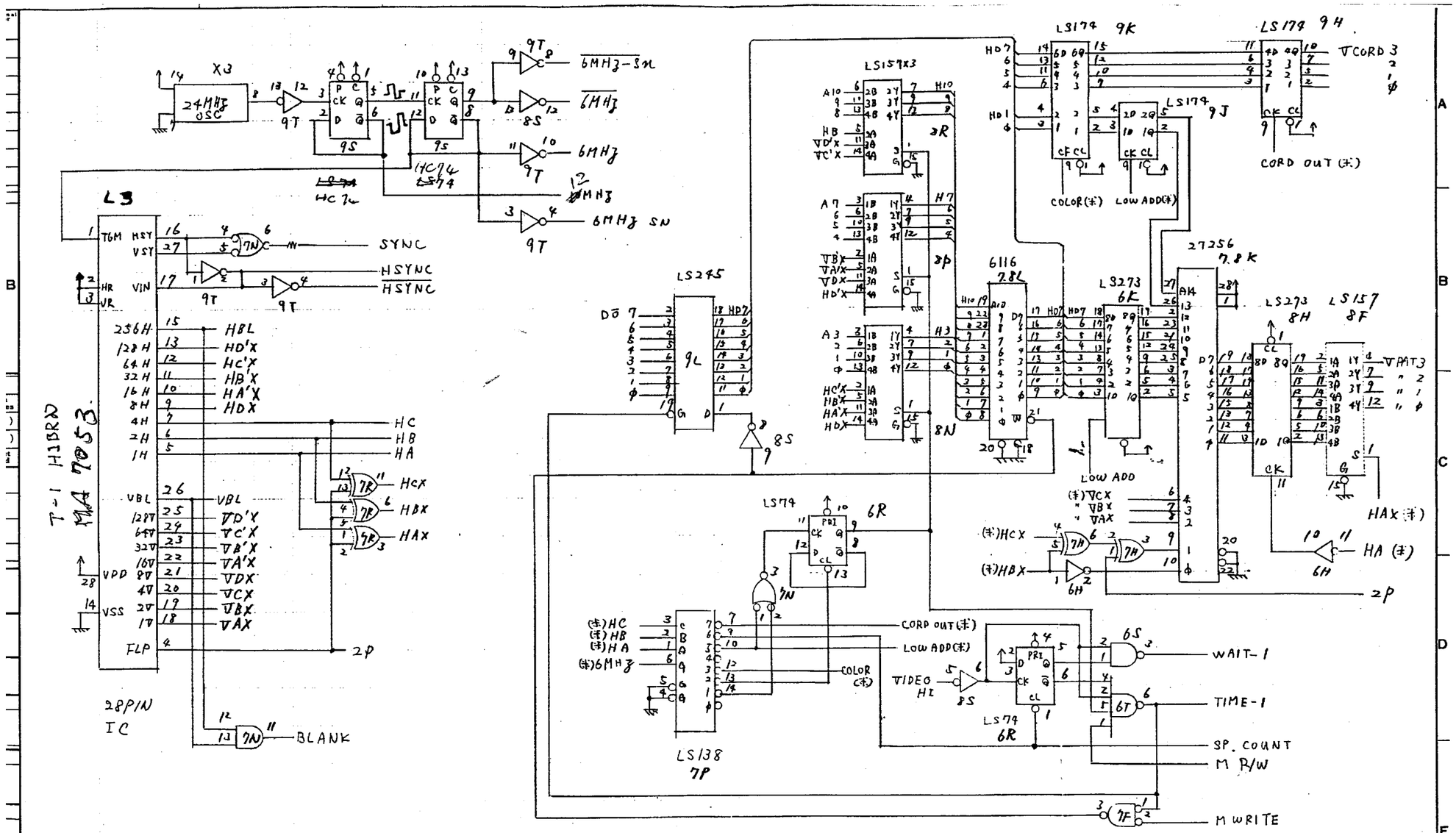

Material dimension				
Processing				
Size tolerance				
1000	±			
300~1000	±			
100~ 300	±			
100	±			
Scale	Quantity			
Unit mm				

Symbol	Date	Content revision	
©	( )	6002 A	(1/10)
Ⓑ	( )	TV SIGNAL	( )
Ⓐ	( )	& VIDEO RAM	( )

Parts cord / Parts name

Edit name: YOSHIDA. RYGER

Kind

Filing of drawing

Our used early model

Temporality same

TEHKAN LTD.

Print

Page 1

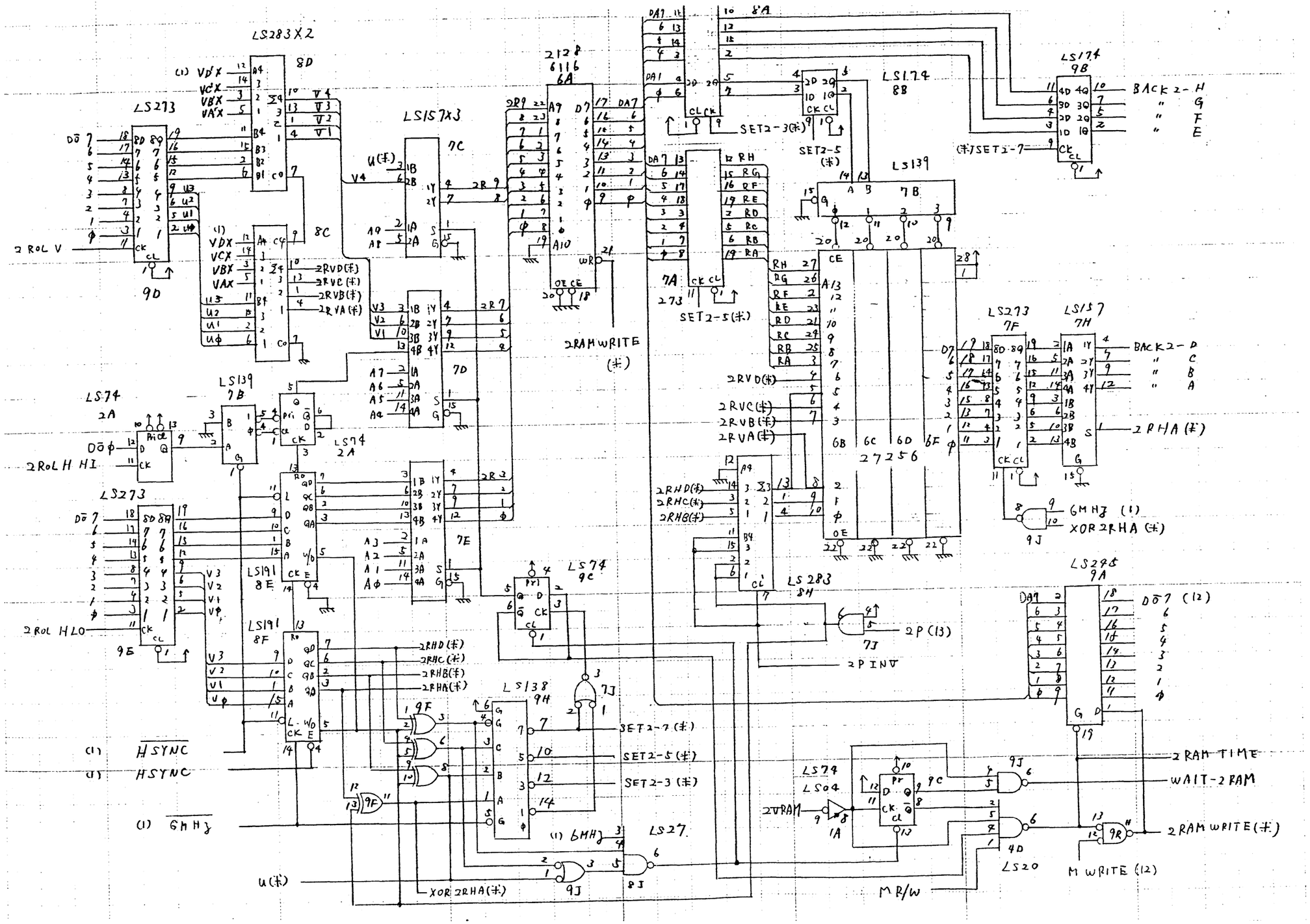
LS283X2
8D
LS273
9D
LS157X3
7C
2128
6116
6A
LS174
8B
LS174
9B
BACK2-H
BACK2-G
BACK2-F
BACK2-E
SET2-3(#)
SET2-5
(#)
(#)SET2-7
LS139
7B
2ROL V
2RAMWRITE
(#)
SET2-5(#)
LS273
7F
LS157
7H
BACK2-D
BACK2-C
BACK2-B
BACK2-A
2RHA(#)
2RVD(#)
2RVC(#)
2RVB(#)
2RVA(#)
27256
6B
6C
6D
6F
LS74
2A
2ROL H HI
LS139
7B
LS74
2A
LS273
9E
2ROL HLO
LS191
8E
LS191
8F
7E
LS74
9C
LS283
8H
2RHD(#)
2RHC(#)
2RHB(#)
2RHA(#)
6MHZ (1)
XOR2RHA (#)
9J
2P (13)
7J
2PINV
LS295
9A
2RAM TIME
WAIT-2RAM
2RAMWRITE(#)
M WRITE (12)
M R/W
LS20
4D
LS74
LS04
2VRAM
1A
9C
LS138
9H
SET2-7 (#)
SET2-5 (#)
SET2-3 (#)
(1) 6MHZ
LS27
8J
HSYNC
HSYNC
6MHZ
u(#)
XOR2RHA(#)
9J
9F

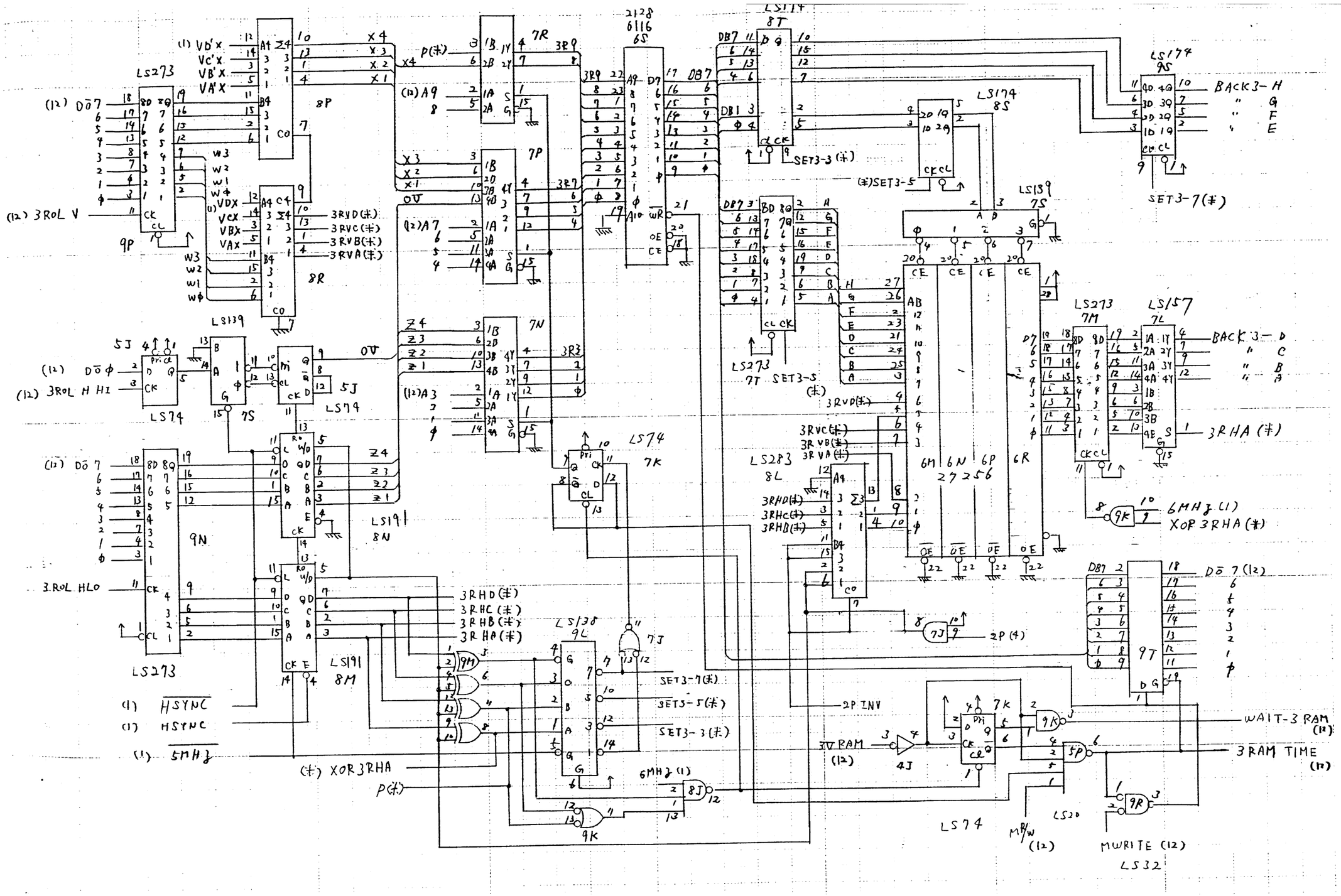
LS273
LS174
LS139
LS157
LS283
LS191
LS138
LS532
2128
6116
27256
BACK3-H
BACK3-D
3RHA (*)
6MHz (1)
XOR 3RHA (*)
WAIT-3 RAM (12)
3RAM TIME (12)
MWRITE (12)
SET3-7(*)
SET3-5(*)
SET3-3(*)
3RHD(*)
3RHC(*)
3RHB(*)
3RHA(*)
HSYNC
5MHz
2P INV
2P (4)

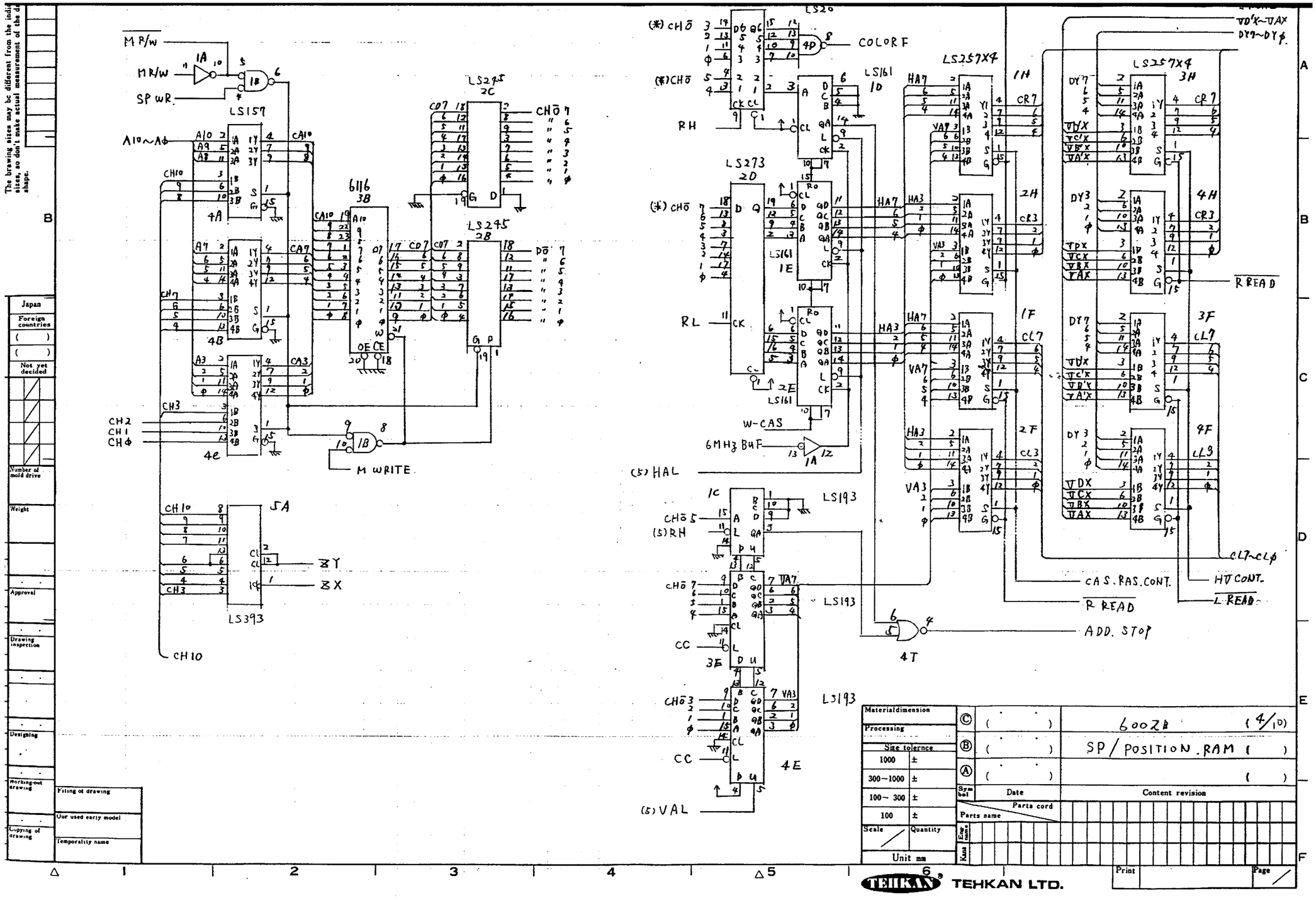
M R/W
MR/W
SP WR
LS157
A10~A0
6116
3B
LS245
2C
LS245
2B
CH0 7
D0
M WRITE
CH2
CH1
CH0
4e
LS393
5A
ZY
ZX
CH10
LS273
2D
(*) CH0
RH
RL
LS161
1D
LS161
1E
LS161
2E
W-CAS
6MHz BUF
(5) HAL
LS20
COLOR F
LS257X4
1H
2H
1F
2F
3H
4H
3F
4F
R READ
CAS.RAS.CONT.
ADD. STOP
HV CONT.
L READ
CL7~CL0
LS193
1C
(5) RH
3E
4E
(5) VAL
4T
Japan
Foreign countries
Not yet decided
Number of mold drive
Weight
Approval
Drawing inspection
Designing
Working-out drawing
Copying of drawing
Filing of drawing
Our used early model
Temporality name
Material dimension
Processing
Size tolerance
1000 ±
300~1000 ±
100~ 300 ±
100 ±
Scale
Quantity
Unit mm
6002B (4/10)
SP / POSITION RAM
Symbol
Date
Content revision
Parts cord
Parts name
Print
Page
TEHKAN LTD.

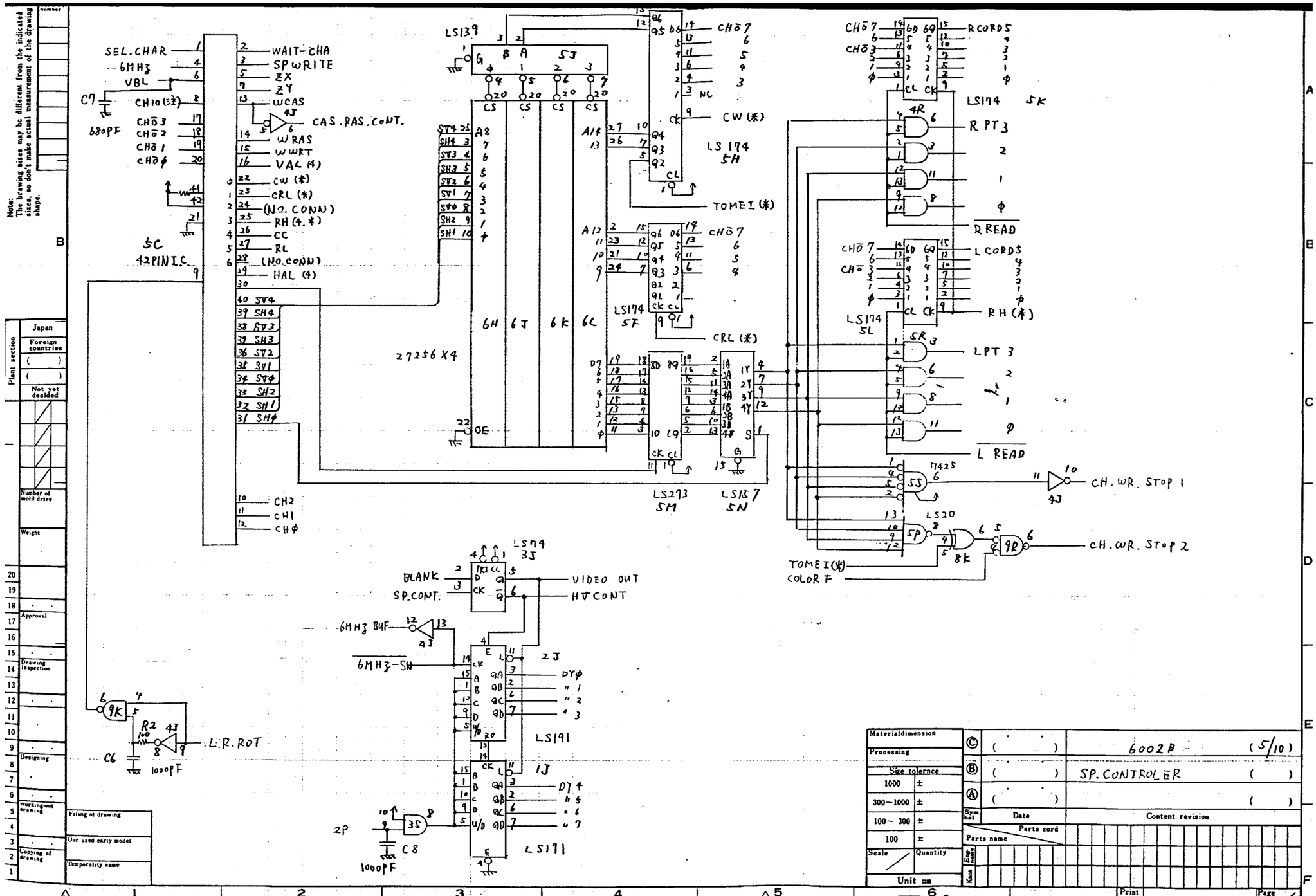

Note: The drawing sizes may be different from the indicated sizes, so don't make actual measurement of the drawing shape.

Plant section	
Japan	
Foreign countries	( )
	( )
Not yet decided	
Number of mold drive	
Weight	
Approval	
Drawing inspection	
Designing	
Working-out drawing	
Copying of drawing	

Filing of drawing	
Our used early model	
Temporality name	

Materialdimension			
Processing			
Size tolerance			
1000	±		
300~1000	±		
100~ 300	±		
100	±		
Scale	Quantity		
Unit mm			

Symbol	Date	Content revision
©	( )	6002B (5/10)
Ⓑ	( )	SP.CONTROLER ( )
Ⓐ	( )	( )

Parts cord / Parts name

Size / Kind

TEHKAN LTD.

Print

Page

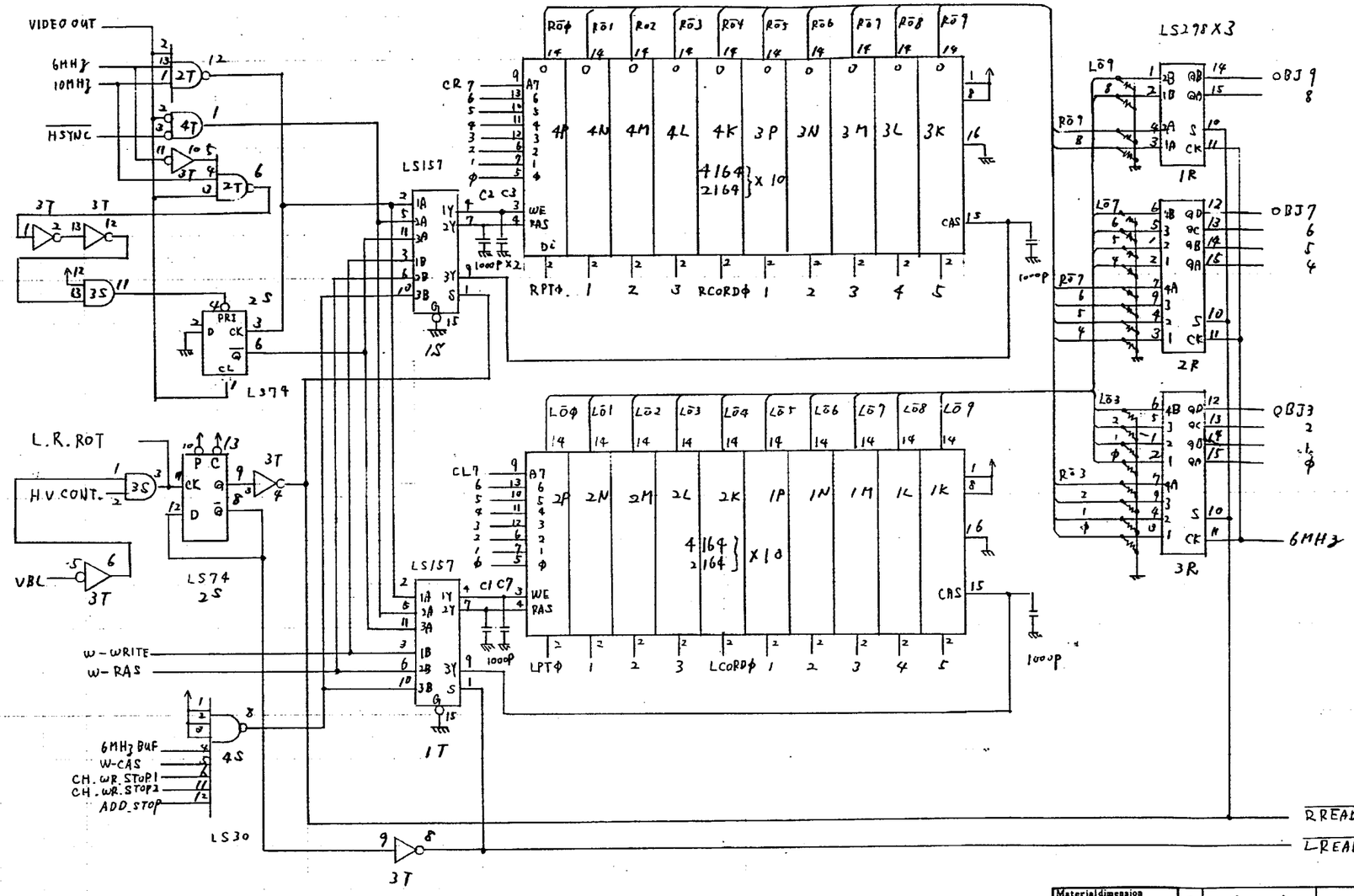

Note: The drawing sizes may be different from the indicated sizes, so don't make actual measurement of the drawing shape.

Plant section: Japan / Foreign countries / Not yet decided

Number of mold drive

Weight

Approval

Drawing inspection

Designing

Working-out drawing

Copying of drawing

Filing of drawing

Our used early model

Temporality name

Material dimension	
Processing	
Size tolerance	
1000	±
300~1000	±
100~ 300	±
100	±
Scale	Quantity
Unit mm	

Symbol	Date	Content revision
Ⓒ	( )	6002BS (6/10)
Ⓑ	( )	SP RAM ( )
Ⓐ	( )	( )

Parts cord / Parts name

Elec name

Kind

TEHKAN LTD.

Print

Page

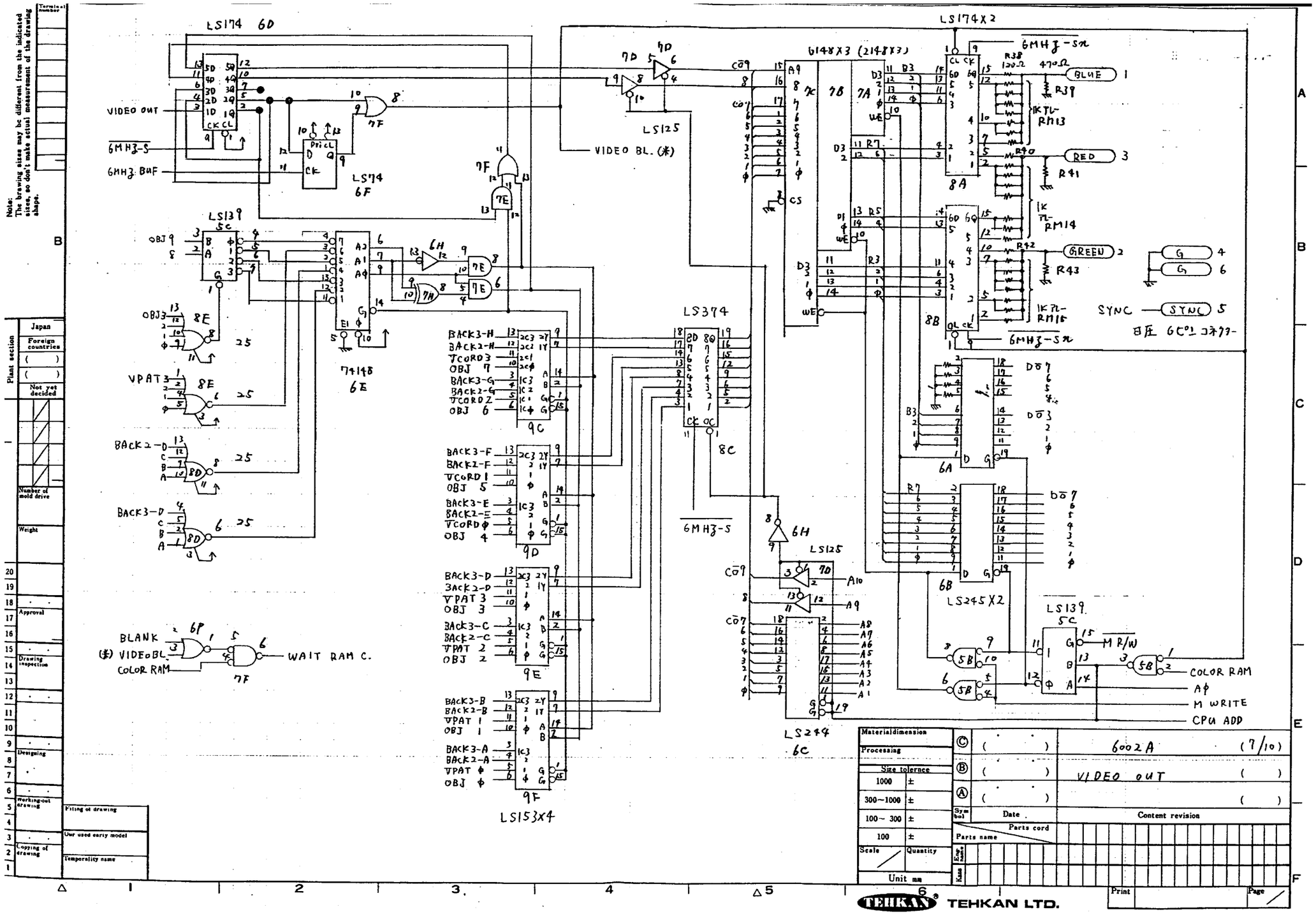

Note: The drawing sizes may be different from the indicated sizes, so don't make actual measurement of the drawing shape.

Plant section: Japan / Foreign countries / Not yet decided

Number of mold drive

Weight

Approval

Drawing inspection

Designing

Working-out drawing

Copying of drawing

Filing of drawing

Our used early model

Temporality name

Material/dimension

Processing

Size tolerance: 1000 ±; 300~1000 ±; 100~ 300 ±; 100 ±

Scale / Quantity

Unit mm

Symbol	Date	Content revision
Ⓒ	( )	6002A (7/10)
Ⓑ	( )	VIDEO OUT ( )
Ⓐ	( )	( )

Parts cord / Parts name / Exp. name / Mass

TEHKAN LTD.

Print

Page

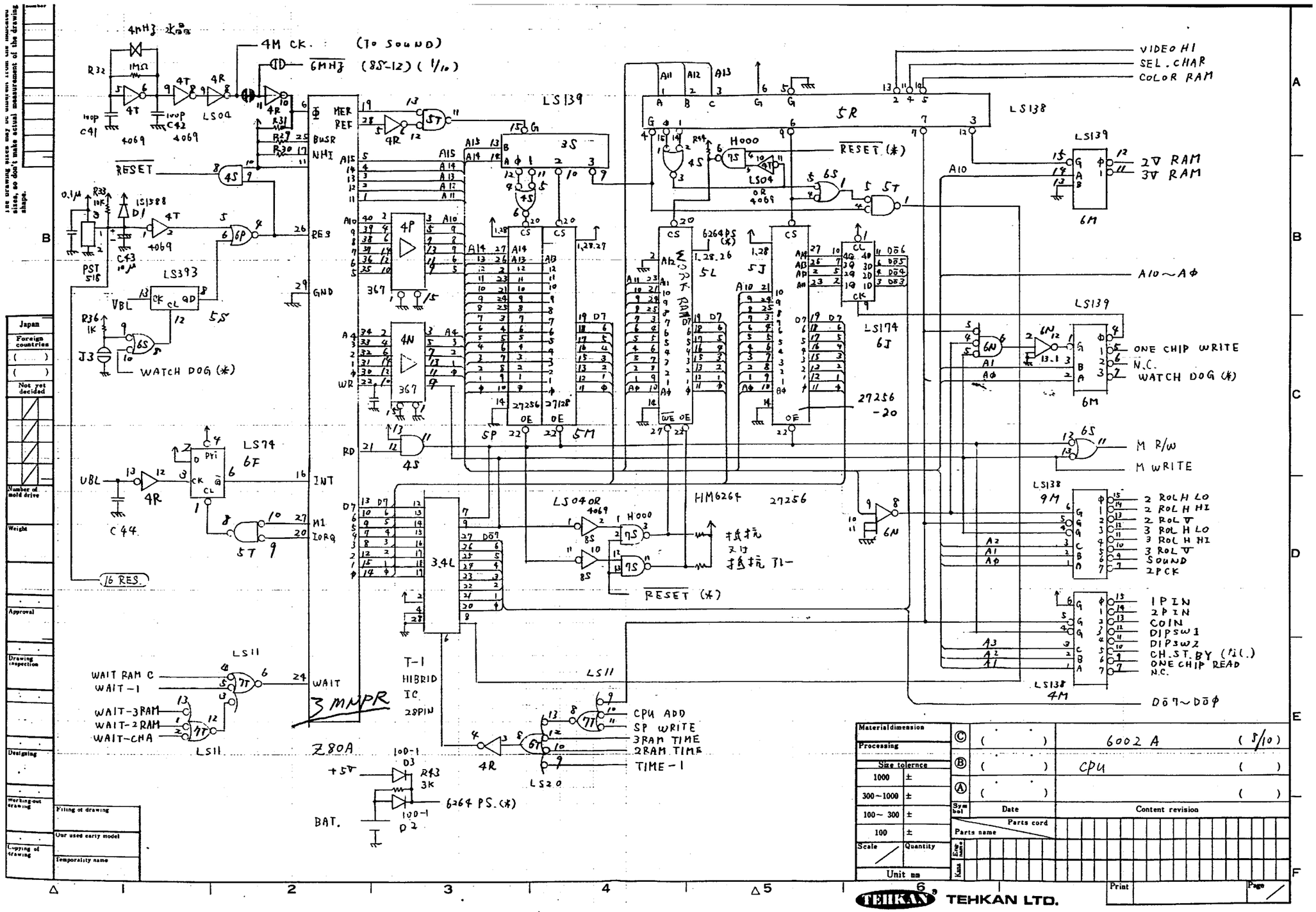
4MHZ
4M CK.
(TO SOUND)
6MHZ (85-12) (1/10)
LS04
LS139
LS138
LS393
LS174
LS40
HM6264
27256
RESET
RESET (*)
WATCH DOG (*)
VBL
INT
M1
IORQ
WAIT
REG
GND
BUSR
NMI
MER
REF
VIDEO HI
SEL. CHAR
COLOR RAM
2V RAM
3V RAM
A10~A0
ONE CHIP WRITE
N.C.
WATCH DOG (*)
M R/W
M WRITE
2 ROLH LO
2 ROLH HI
2 ROL V
3 ROL H LO
3 ROL H HI
3 ROL V
SOUND
2PCK
1P IN
2P IN
COIN
DIPSW1
DIPSW2
CH.ST.BY (N.C.)
ONE CHIP READ
N.C.
D07~D00
WAIT RAM C
WAIT-1
WAIT-3RAM
WAIT-2RAM
WAIT-CHA
T-1
HIBRID
IC
28PIN
Z80A
3MHPR
CPU ADD
SP WRITE
3RAM TIME
2RAM TIME
TIME-1
+5V
BAT.
6264 PS.(*)
6002 A
CPU
TEHKAN LTD.

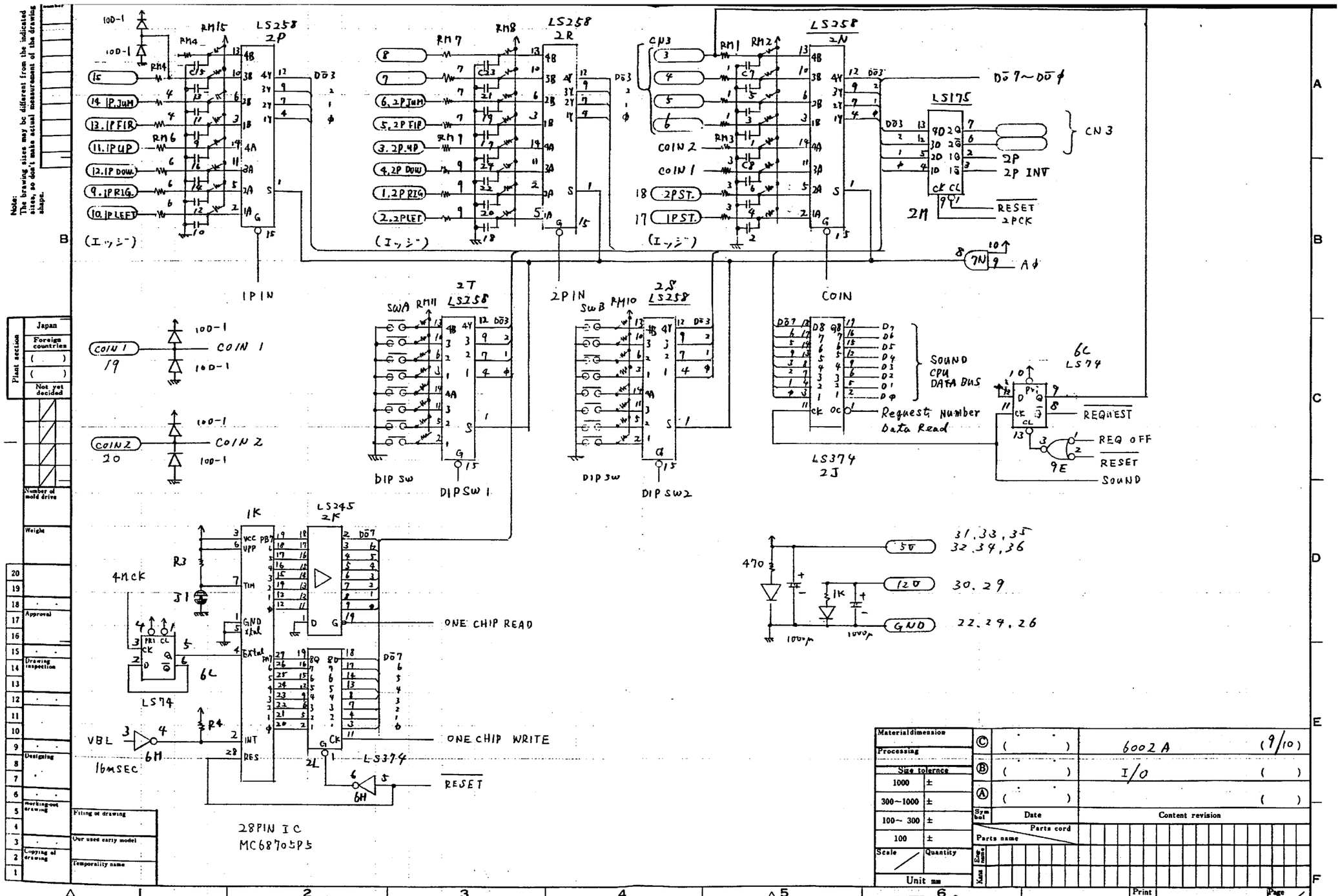

Note: The drawing sizes may be different from the indicated sizes, so don't make actual measurement of the drawing shape.

Plant section	Japan
	Foreign countries
	( )
	( )
	Not yet decided

Number of mold drive

Weight

Approval

Drawing inspection

Designing

Working-out drawing

Copying of drawing

Filing of drawing

Our used early model

Temporality name

Material dimension	
Processing	
Size tolerance	
1000	±
300~1000	±
100~ 300	±
100	±
Scale	Quantity
Unit mm	

Symbol	Date	Content revision
©	( )	6002A (9/10)
Ⓑ	( )	I/O ( )
Ⓐ	( )	( )

Parts cord / Parts name / Drawing name / Xeno

TEHKAN LTD.

Print

Page

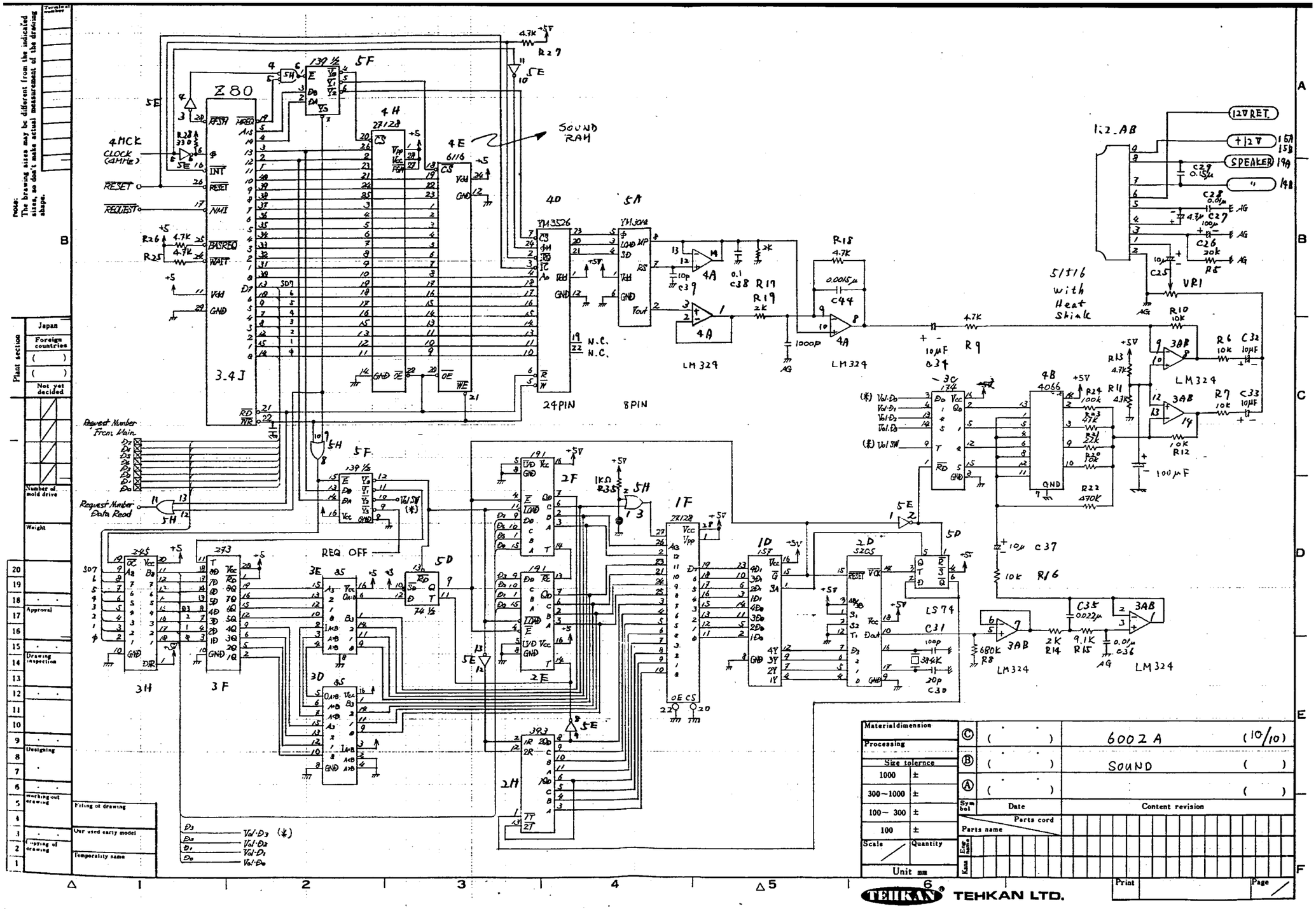
Z80
3.4J
4.MCK
CLOCK (4MHz)
RESET
REQUEST
SOUND RAM
27128
6116
YM3526
YM3014
LM324
24PIN
8PIN
N.C.
REQ OFF
Request Number From Main
Request Number Data Read
245
273
139 1/2
74 1/2
191
393
85
2F
2E
2H
3D
3E
3F
3H
5F
5E
5D
5H
4H
4E
4D
5A
4A
3C
4B
1F
1D
2D
5P
3AB
LS74
C31
4066
5205
5/16 with Heat Shink
12V RET.
+12V
SPEAKER
VR1
R22 470K
R16 10k
R8 680K
R14 2K
R15 9.1K
C35 0.022μ
C36 0.01μ
C37 10μ
C30 20p
C31 100p
C32 10μF
C33 10μF
R6 10k
R7 10k
R10 10k
R12 10k
100μF
Vol·D0
Vol·D1
Vol·D2
Vol·D3
Vol SW
Unit mm
TEHKAN LTD.
6002 A
SOUND
Material dimension
Processing
Size tolerance
Scale
Quantity
Filing of drawing
Our used early model
Temporality name
Japan
Foreign countries
Not yet decided
Number of mold drive
Weight
Approval
Drawing inspection
Designing
Working out drawing
Copying of drawing
Plant section
Terminal number
Note: The drawing sizes may be different from the indicated sizes, so don't make actual measurement of the drawing shape.
Symbol
Date
Content revision
Parts cord
Parts name
Eng. name
Kana
Print
Page